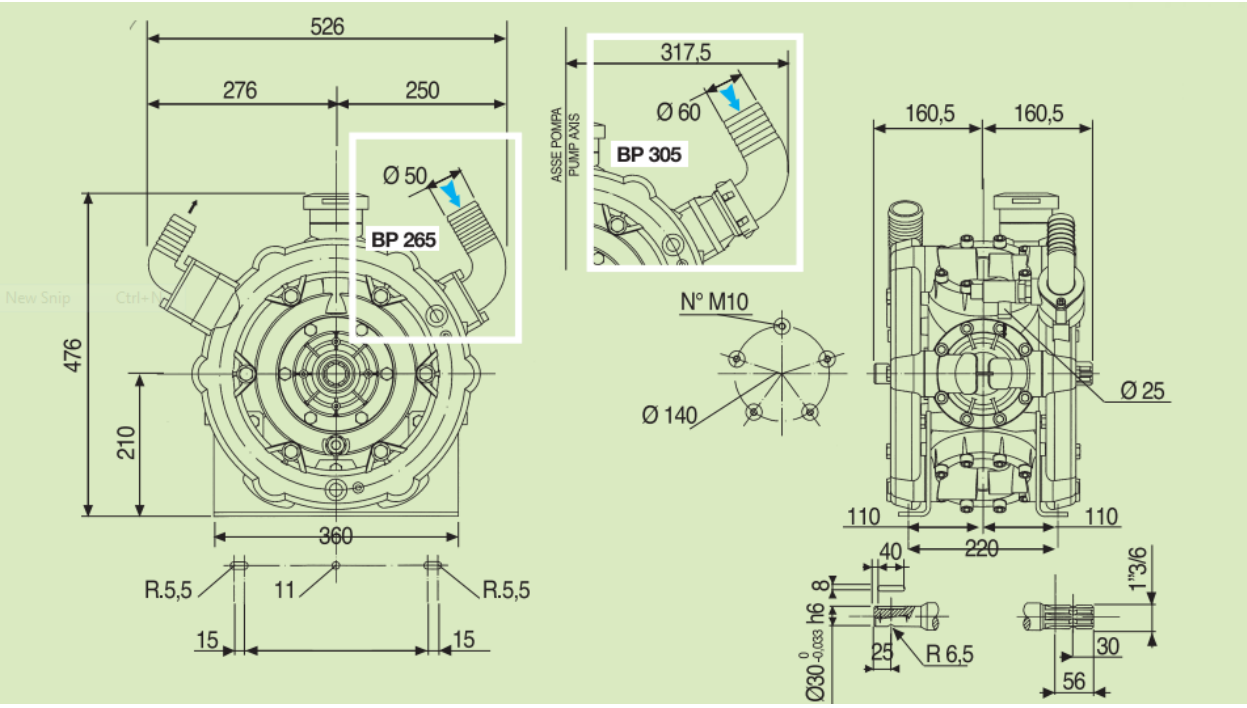Comet BP305 Pump Dimensions (in mm)