Revised 2-1-2011

TC 5.0/25-U

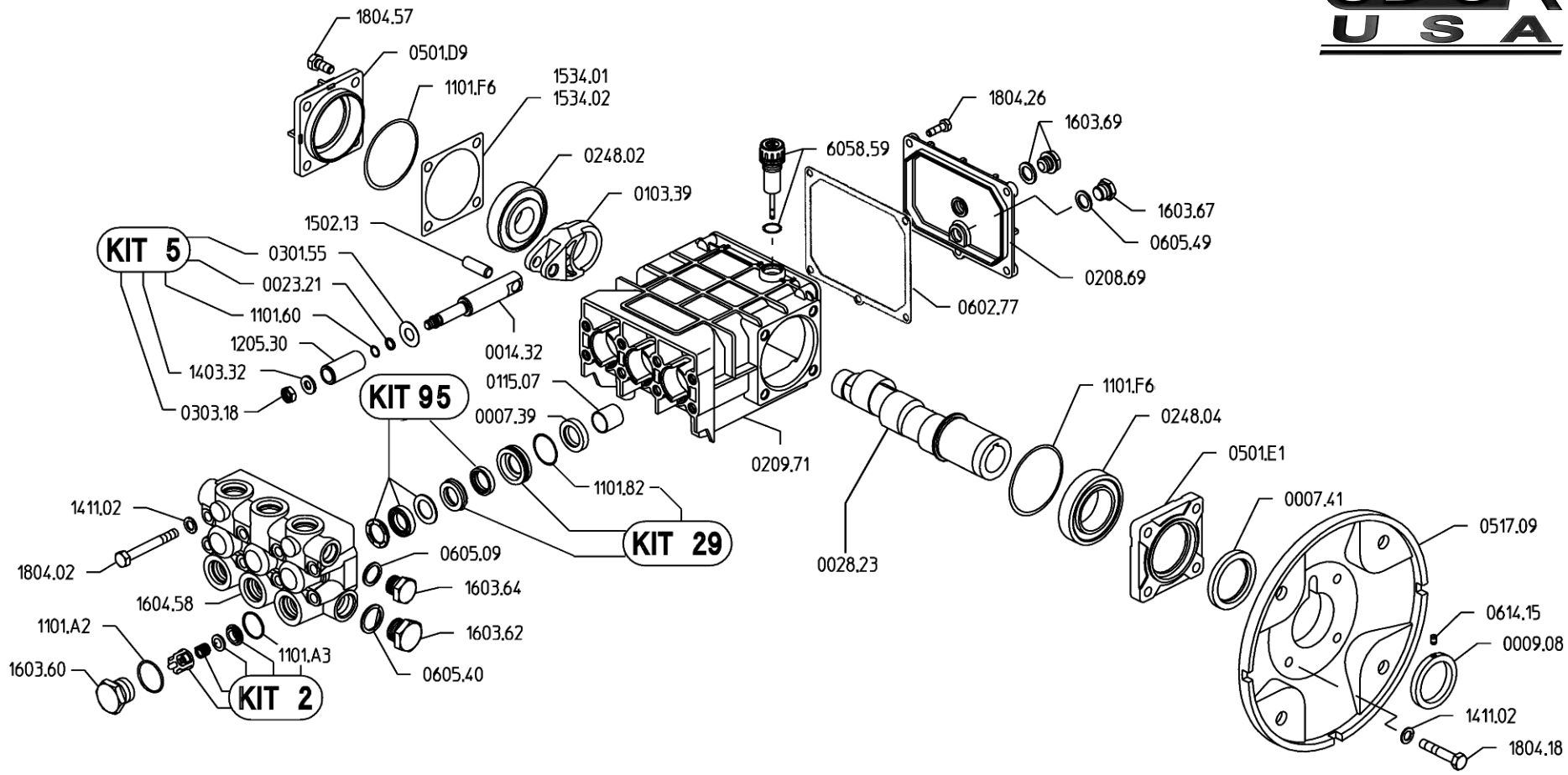

TC 5.0/25-U Quick Reference

Maximum Flow .....5.0 GPM	Valve Kit 04-KIT UD-2
Maximum Pressure .....2500 PSI	Seal Kit.....04-KIT UD-95
Rated Pump Speed .....1750 RPM	Brass Kit 04-KIT UD-29
Oil Capacity.....20 oz. UDOR LUBE	Plunger Bolt Kit 04-KIT UD-5
or SAE 30W	Plunger Part # 04-1205.30
Non-Detergent Oil	Plunger Diameter.....18 MM