PENTA SERIES PLUNGER PUMPS

All dimensions are in millimeters. (x .03937 for Inches)

PENTA-B 25/400
PENTA-C 35/400
Have 1" inlet &
1/2" discharge

*** All other PENTA Models have 1-1/4" inlet & 3/4" discharge.**

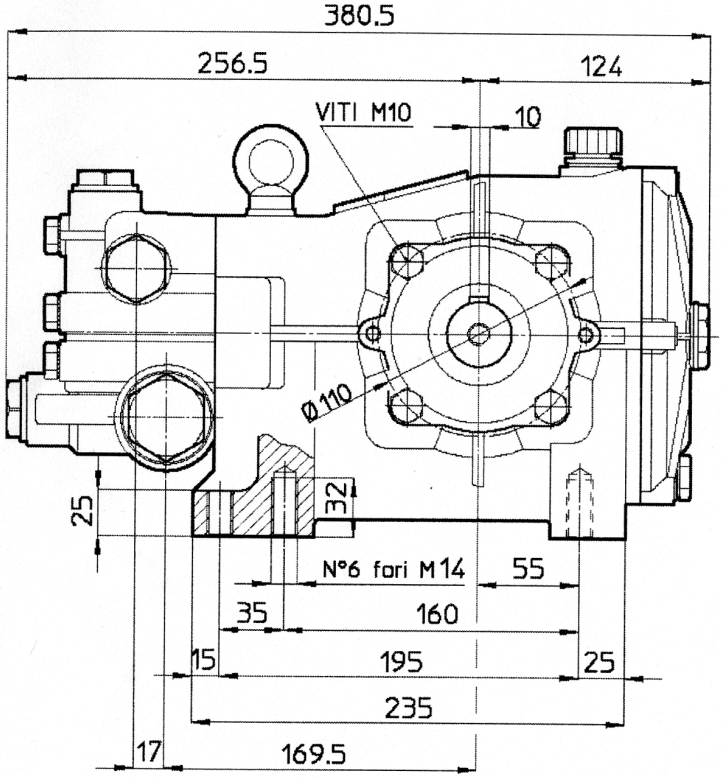

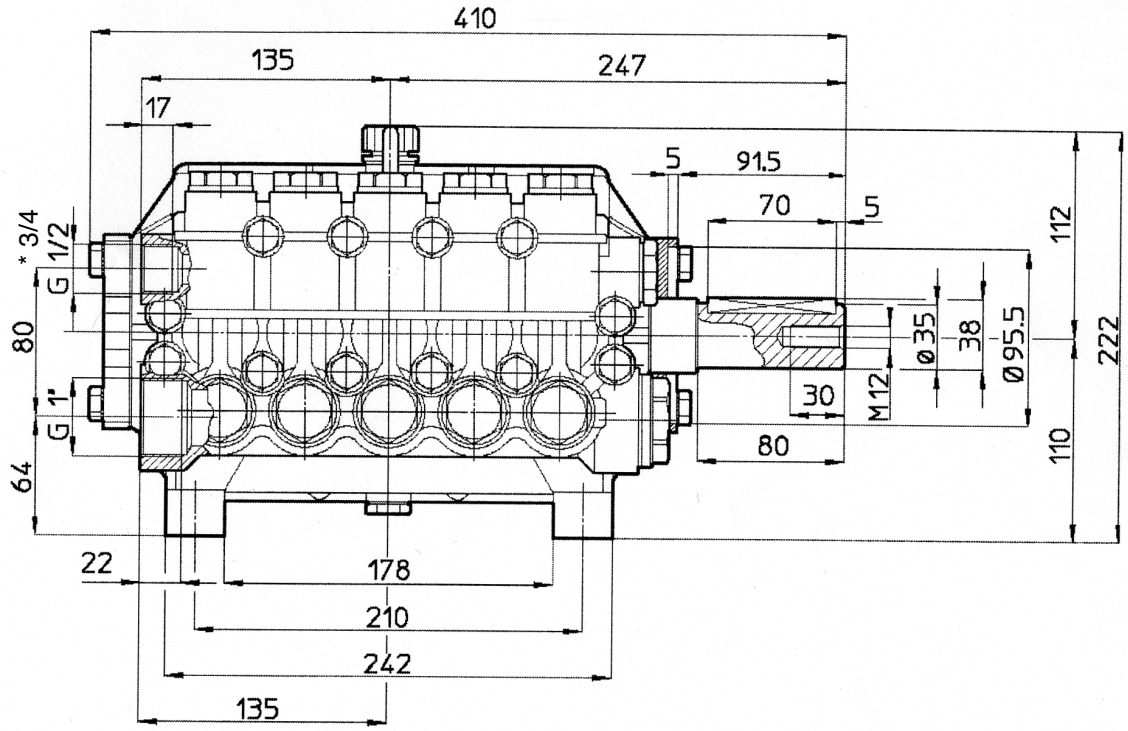

Revised 10-1-2005